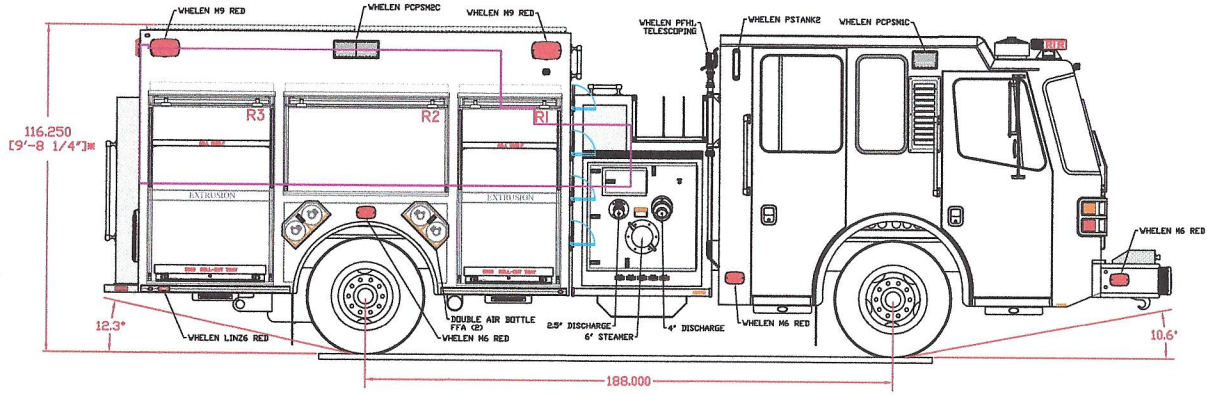


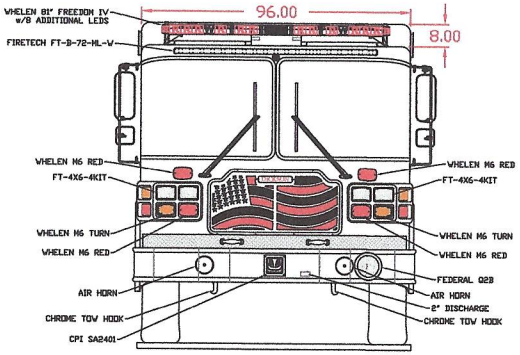


FERRARA
REV GROUP

# DICKSON FIRE DEPARTMENT
# DICKSON, TN
## JOB NO.:H6901 / CH3072
1,500 GPM HALE QMAX PUMP
1,000 GALLON WATER TANK

| COMPARTMENT DIMENSIONS | | |
|---|---|---|
| COMPT. | OPENING | INTERIOR |
| L1/R1 | 33.5W X 61.25H | 36W X 70H X 15/28D |
| L2/R2 | 55.5W X 29.25H | 58W X 38H X 15D |
| L3/R3 | 41.5W X 61.25H | 44W X 70H X 15/28D |
| B1 | 31.5W X 48.25H | 34W X 57H X 32D |

IT IS UNLAWFUL TO COPY OR REPRODUCE ANY OR ALL OF THIS DRAWING WITHOUT THE WRITTEN PERMISSION OF FERRARA FIRE APPARATUS. ANY UNAUTHORIZED REPRODUCTION WILL RESULT IN PROSECUTION TO THE FULLEST EXTENT OF THE LAW. DIMENSIONS AND ITEM LOCATIONS ARE APPROXIMATE AND ARE SUBJECT TO DEVIATIONS THAT MAY OCCUR OR BE NECESSARY DURING CONSTRUCTION. SOME DETAILS MAY NOT BE SHOWN.

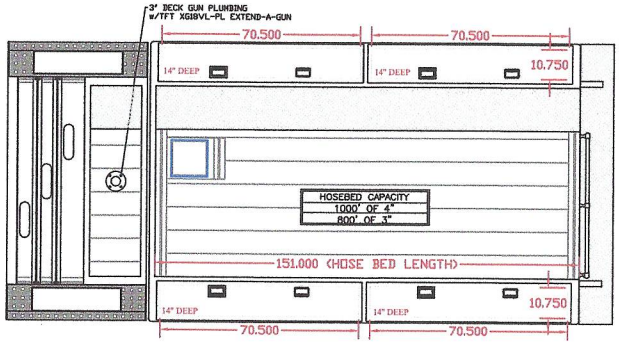


**CUSTOMER APPROVAL**

NAME: _____

BY: _____

TITLE: _____

DATE: _____

DRAWING IS A VISUAL REPRESENTATION OF A SPECIFIED APPARATUS. IN THE EVENT OF DISCREPANCIES BETWEEN SPECIFICATIONS AND DRAWING, THE SPECIFICATIONS SHALL PREVAIL. DRAWING IS FOR REFERENCE ONLY. SOME DETAILS MAY NOT BE SHOWN OR NOTED.

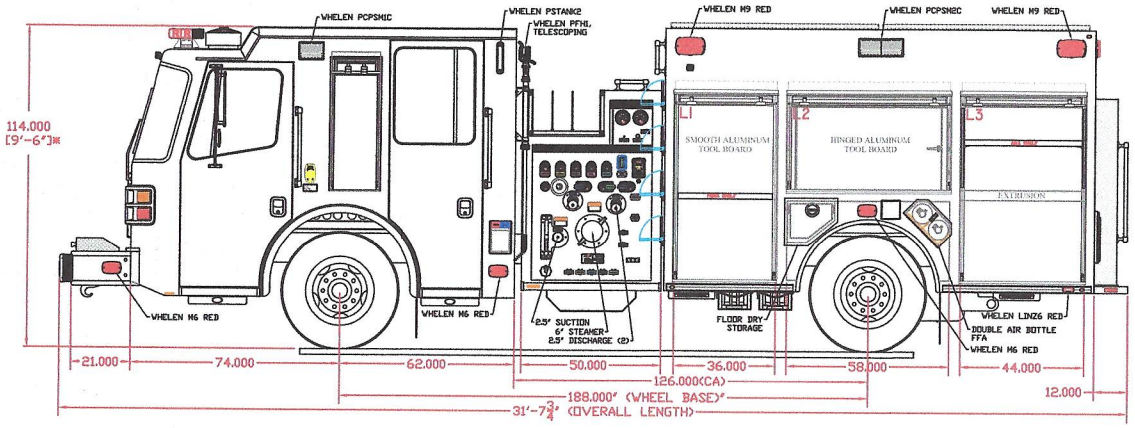


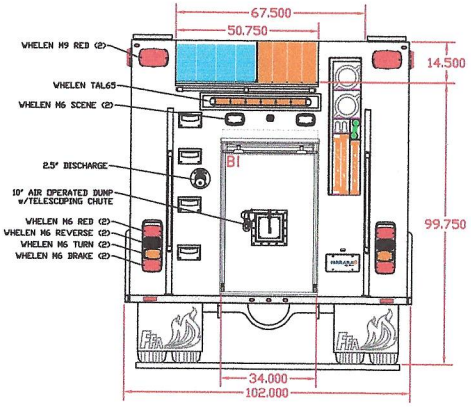


**07-16-21 APPROVAL (AS)**

*HEIGHT COULD VARY +/- 2" BASED ON LOADING OF VEHICLE